Appl. Phys. B 31, 97–105 (1983)

Applied Physics B Photophysics and Laser Chemistry

© Springer-Verlag 1983

Laser Phase and Frequency Stabilization Using an Optical Resonator

R. W. P. Drever

University of Glasgow and California Institute of Technology, Pasadena, CA 91125, USA

J. L. Hall* and F. V. Kowalski**

Joint Institute for Laboratory Astrophysics, National Bureau of Standards and University of Colorado, Boulder, CO 80309, USA

J. Hough, G. M. Ford, A. J. Munley, and H. Ward

Department of Natural Philosophy, University of Glasgow, Glasgow, Scotland G12800

Received 1 February 1983/Accepted 10 February 1983

Abstract. We describe a new and highly effective optical frequency discriminator and laser stabilization system based on signals reflected from a stable Fabry-Perot reference interferometer. High sensitivity for detection of resonance information is achieved by optical heterodyne detection with sidebands produced by rf phase modulation. Physical, optical, and electronic aspects of this discriminator/laser frequency stabilization system are considered in detail. We show that a high-speed domain exists in which the system responds to the phase (rather than frequency) change of the laser; thus with suitable design the servo loop bandwidth is not limited by the cavity response time. We report diagnostic experiments in which a dye laser and gas laser were independently locked to one stable cavity. Because of the precautions employed, the observed sub-100 Hz beat line width shows that the lasers were this stable. Applications of this system of laser stabilization include precision laser spectroscopy and interferometric gravity-wave detectors.

PACS: 06, 07.60, 07.65

The adoption of high-finesse Fabry Perot cavities for a prototype gravitational wave detector [1] requires the development of very high precision short term stabilizing techniques for an argon-ion laser. Similarly, there is considerable incentive to improve the frequency stabilization of dye lasers for spectroscopic applications. Optical resonators [2–4] have been used to provide frequency discriminator functions for servo control of both types of laser [3, 5–8] and form the basis for at least three commercially-available frequency-stabilized dye laser systems. In this paper we describe an improved rf sideband type of optical discriminator capable of high precision, low-noise performance and having a response time not limited by the optical resonator. We illustrate the technique with several experiments including demonstration of sub-100 Hz laser line widths.

Development of Techniques

Before considering the ultimate performance capability of frequency-stabilized lasers, we first discuss some practical problems and review the technical progress which has been made previously. In view of the very rapid time scale of fluctuations associated with the dye laser's free-flowing jet and with plasma movement in the ion laser, it is understandable that efforts to improve their frequency-stabilization performance have centered on developing faster transducers and

* Staff Member, Quantum Physics Division, National Bureau of Standards

** Present address: Colorado School of Mines, Golden, Colorado

electronic systems. Miniaturization of the PZT transducer and laser mirror can provide ~ 200 kHz servo bandwidth and ~ 40 kHz residual laser frequency noise [9]. Use of an intracavity electro-optic modulator crystal allows increased servo bandwidths ($\gtrsim 1$ MHz) and can provide a laser linewidth of a few kHz [6–8], still limited somewhat by the high-frequency surface roughness of the jet stream or by fast argon-plasma noise. Intermediate servo precision can be conveniently obtained with an acousto-optic frequency shifter located outside the laser resonator [10].

However, two basic difficulties remain with the fast optical-frequency discriminator system. For one, to eliminate conversion of laser intensity noise into frequency noise while preserving a bipolar error signal, it is customary to compare an independent sample of the laser intensity with the cavity transmission signal tuned near its half-maximum tuning point [3]. Unfortunately problems of matching photodetectors make it difficult to achieve good long-term stability with such a fringe-side servo, no matter how well the cavity itself is stabilized by a reference laser and frequency offset lock system. Further we may expect that the same laser medium fluctuations that produce frequency noise also will produce changes in the laser spot's shape and thus influence the mode-matched cavity transmission in a correlated and deleterious way. We find, in fact, that spatial filtering improves the system's performance in spite of the loss of control light.

A second problem area relates to optimal choice of the reference cavity and servo loop bandwidths. To better suppress the intrinsic laser noise by feedback action, we need to increase the servo gain. Closed-loop stability requirements then dictate a proportional increase in the servo loop bandwidth. However, as shown by [8] with the conventional "fringe-side" servo, transient response errors make it useless to employ a servo control bandwidth substantially greater than the cavity discriminator linewidth. Thus, we have dilemma that the high bandwidth required to control the laser's intrinsic noise effectively requires use of a wider cavity response which then brings increased measurement noise in view of the associated lower discriminator slope. A fundamental advantage of the new locking system to be described is that it locks the laser to the cavity maximum transmission point where the transient response overshoot problem does not exist [4, 8]. It is useful to understand these considerations quantitatively.

Performance Limitation

The fundamental performance limit of any optical frequency control system is set by the photoelectron shot noise, since this noise in the photocurrent cannot be distinguished from a signal current due to a real frequency variation. Indeed when the servo gain and bandwidth are high, as they will be to suppress the laser's intrinsic noise, this noise will be *imposed* onto the laser frequency to produce the appropriate servo null. It is easy to calculate the frequency variations associated with this inescapable shot noise limit [8]. For measurements with an averaging time of τ, the frequency fluctuations $\delta\nu(\tau)$, due to measurement shot noise are

$$\delta\nu(\tau) \geqq \delta\nu_c \left(\frac{\hbar\omega}{P_0 T\eta}\right)^{1/2} \left(\frac{1}{\tau}\right)^{1/2}, \tag{1}$$

where $\delta\nu_c$ is the reference cavity full width at half maximum, P_0 the (mode-matched) laser input power, T the on-resonance transmission efficiency of the optical cavity, η is the photodetector quantum efficiency, $B = 1/2\pi\tau$ is the measurement bandwidth, and $\tau > 1/2\pi\delta\nu_c$. For typical values ($\delta\nu_c = 2$ MHz, $P_0 = 1/3$ mW, $T = 0.2$, $\eta = 0.9$, $\omega/2\pi = 5 \times 10^{14}$ Hz) we obtain a limiting theoretical frequency stability of ~ 150 Hz in a 1 MHz bandwidth. This value is in reasonable accord with experiment [8] when ~ 12 dB is allowed for the reduction in servo loop effectiveness at the highest frequencies due to settling time problems and propagation delays in the electronics.

Considering the white spectral character of the shot noise process, we can understand that the controlled laser's frequency will have most of its shot-noise-induced frequency excursions at very high effective "modulation" frequencies. The corresponding FM modulation index then turns out to be quite small for our cases of interest. Basically, the associated FM sidebands at high frequencies (~ 100 kHz–1 MHz) contain little power compared with the optical carrier, so for many kinds of experiments they have no important consequences.

This conclusion is equally valid for the small residual high-frequency excursions remaining if the servo gain is inadequate at the highest frequencies to completely suppress the laser's intrinsic noise. If the phase excursion is $\ll 1$ radian, then only a small power is present in the sidebands [11].

Design

In designing laser frequency control systems, to reduce cavity line-center accuracy problems and minimize frequency drift it is appropriate to consider modulation techniques. A preliminary optical phase modulation sideband scheme was suggested earlier [10]. However, in that work, the modulation sidebands were transmitted with the laser carrier through the control

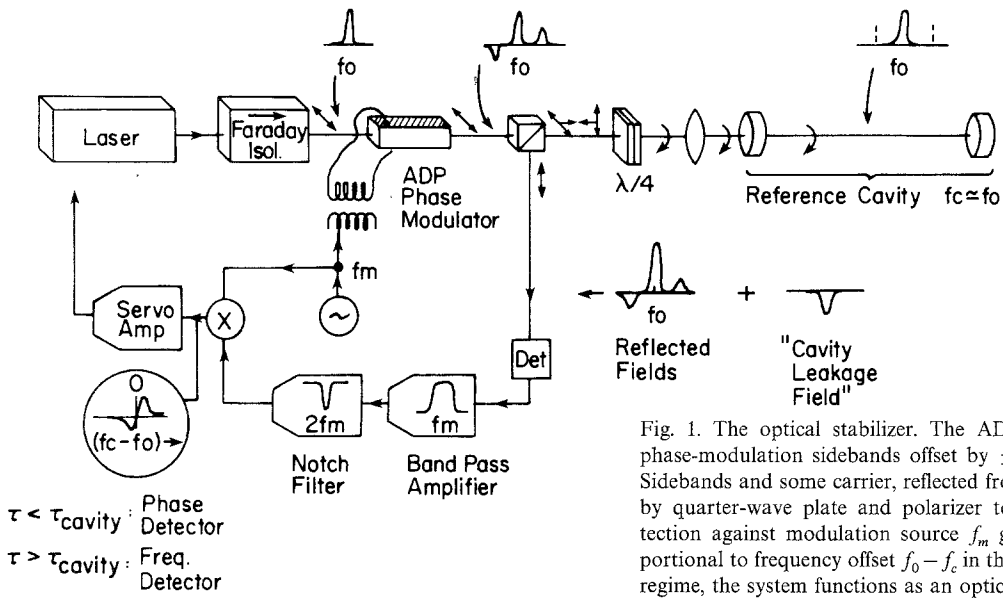

Fig. 1. The optical stabilizer. The ADP phase modulator produces phase-modulation sidebands offset by $\pm f_m$ from carrier frequency f_c. Sidebands and some carrier, reflected from reference cavity, are steered by quarter-wave plate and polarizer to detector. Phase-sensitive detection against modulation source f_m gives bipolar error signal proportional to frequency offset $f_0 - f_c$ in the adiabatic regime. In transient regime, the system functions as an optical phase detector (see text)

cavity and some difficulties of profile asymmetry were noticed. A superior configuration, illustrated in Fig. 1 uses the optical resonator in the reflection mode [4, 12]. The phase modulator crystal (ADP) produces phase-modulation sidebands which are located spectrally well outside the resonator passband. These FM sidebands are basically totally reflected from the control cavity input mirror and are steered by the Faraday-rotator/Thompson prism assembly to a fast photodetector and associated preamp. The laser "carrier" frequency approximately matches the cavity resonance frequency and this leads to a buildup of intracavity standing-wave intensity at the laser frequency. As in discussing the analogous microwaves case [13, 14] – the well-known "Pound stabilizer" – it is convenient to note that the leakage field back toward the source is basically in antiphase with the input field directly reflected from the coupling mirror. The approximate cancellation of these two fields (in reflection) thus leads to a small net reflection coefficient with a phase shift which is strongly frequency-dependent in the vicinity of the resonance. The reflected signal is heterodyned with the local oscillator sidebands for subsequent if amplification. The phase-sensitive demodulation against the rf source (driving the modulator crystal and thus providing the frequency offset between carrier and local oscillator sidebands) converts the symmetric minimum in the cavity reflection coefficient into the desired antisymmetric frequency discriminator curve.

Results and Discussion

The signals obtained in this kind of system are shown in Fig. 2. The top curve shows the transmitted in-

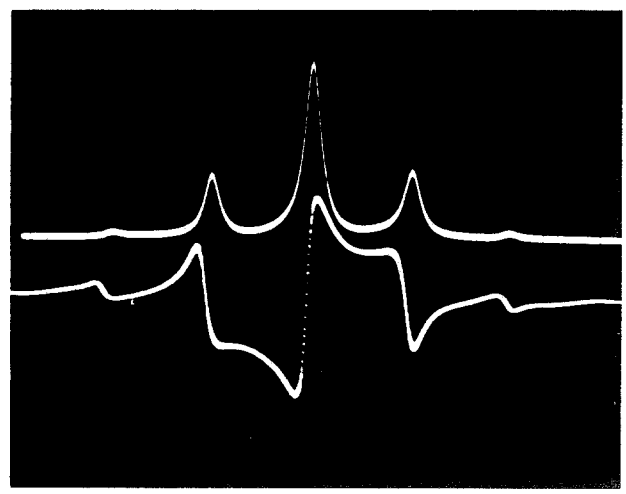

Fig. 2. Signals in the optical stabilizer. Upper curve, transmitted laser intensity as cavity is tuned over sideband structure of phase-modulated laser beam. First and second sidebands visible symmetrically on both sides of the carrier (prominent central line). Lower curve, output of the phase detector with phase reference adjusted for dispersion. Lock point is the zero in the central high-slope region. Note that the error signal sign is correct for servo purposes over the full spectral interval $2f_m$

tensity, as the cavity is tuned over the sideband spectrum of the phase-modulated laser. The output of the phase-sensitive detector, lower curve in Fig. 2, shows a "frequency-discriminator" dispersion resonance whenever any of the input frequencies match the cavity resonance frequency. These curves were taken with a 15 MHz modulation frequency and a 3 MHz FWHM cavity width. This rf sideband type of frequency-discriminator system thus provides its lock point at the resonance center and is capable of extremely good performance [12]. Techniques funda-

mentally equivalent to these are used in basically all high performance frequency standards and in other applications where the best possible performance is needed in locking a source to a resonance.

However, as implied in the introduction, the high carrier frequency of laser sources leads easily to the case that rather large unplanned phase deviations are possible in rather short times. For example, we find that typical jet-stream laser sources may have several radians of phase excursion in a microsecond. Alternatively in considering a search for gravity waves using a long interferometer of high finesse, such extreme high finesse × length products are considered for the interferometer that cavity ringing times much longer than the laser coherence time are to be expected. One is thus naturally led to a transient-domain discussion of the Pound stabilizer and to an appreciation of a remarkable – and we think new – time domain aspect of its operation. We consider the same optical setup of Fig. 1 that was discussed before. Now for simplicity we will focus on rapid variations of the laser input frequency (phase), where by rapid we mean fast enough that the resonator's internal field is not in equilibrium with its input. One will thus be led to view the cavity resonator as a *phase storage element* in which the internal field represents an appropriate average over the recent phase history of the input wave. The photodetector input signal near the laser and cavity resonance frequency thus contains two components: a direct reflection term and a leakage field term. First we consider the component directly reflected from the coupling mirror. This field is phase locked to the reflected sideband fields because they are all samples of, and are derived from, the current output of the laser source, albeit with a frequency offset introduced by the phase-modulator crystal. Optical detection followed by rf phase-sensitive detection of this triplet (carrier plus two phase-modulation sidebands) will in fact produce nominally zero if output and be independent of the resonator/laser detuning. (Basically, the two beat photodiode currents at the if frequency are in anti-phase and cancel since we have produced *phase* rather than *amplitude* modulation.)

A second field related to the laser frequency is sent from the laser cavity back toward the source. It may be understood as the "leakage" of the intracavity resonant fields back through the input coupling mirror. The essence of the new technique rests on the property that for very short times the *phase* of the intracavity field – and so of this leakage wave – cannot follow the fast phase variations of the laser sources. Remembering that the optical "local oscillator sidebands" are derived from the prompt laser phase without this storage delay experienced by the approximately-resonant laser carrier, it may be seen that the same electronic setup described before is now producing a "discriminator" signal which is, in fact, proportional to the laser's phase jitter from an optical sine wave. It is easy to see that, for those laser phase variations which are much slower than the cavity field storage time, the cavity internal field begins to follow its input and the system reverts from being an optical phase-detector to being an optical frequency discriminator. Analysis [14] – confirmed by our experiments – shows that this transition is smooth and that a servo system can operate properly with a response time far shorter than the cavity storage time when allowance is made in the servo electronics for the intrinsic 90° phase-change associated with this transition. It is very attractive that one is thus able to have a very fast and tight servo while still using a very sharp cavity resonance to minimize the dc errors in the frequency lock.

Applications and Performance

The initial conception and much early development of this stabilization method arose during work on gravitational radiation detectors at Glasgow and, in practice, it has proved very satisfactory in this application. Here an argon-ion laser is frequency locked to one of the resonant modes of a triangular ring cavity with two sides 10 m long and the third 0.05 m, formed between mirrors mounted on freely suspended masses in a large vacuum system. Subsidiary servo systems control the orientation and low frequency seismic motions of the masses. A second similar 10 m cavity with its long axis perpendicular to that of the first could be used as a frequency analyzer to assess the stabilization achieved. In this case the phase-modulation technique was used to give a servo-control signal for a piezoelectric transducer supporting one of the cavity mirrors, which adjusted the cavity length to maintain it precisely in resonance with the laser light. Analysis of the feedback voltage applied to the piezo transducer gives an upper limit to the residual frequency fluctuations of the laser with respect to the resonance frequency of the second cavity. This shows that for frequency fluctuations occurring around 1 kHz, the main region of interest for the planned gravity-wave experiments, stabilization factors of greater than 10^4 were achieved, giving a frequency spectral density of better than $0.3\,\mathrm{Hz}/\sqrt{\mathrm{Hz}}$ at 1 kHz away from the optical carrier frequency of 5.8×10^{14} Hz. This performance was obtained with about 6 mW of light into the reference cavity, which had a finesse of approximately 100, and with a phase modulation of 0.8 radians amplitude at 24 MHz.

Our experiments at JILA were intended to investigate the system-performance capability in more detail. In the process, a jet-stream laser servo-stabilized linewidth below 100 Hz was produced, limited by remediable defects in our servo electronics. We were es-

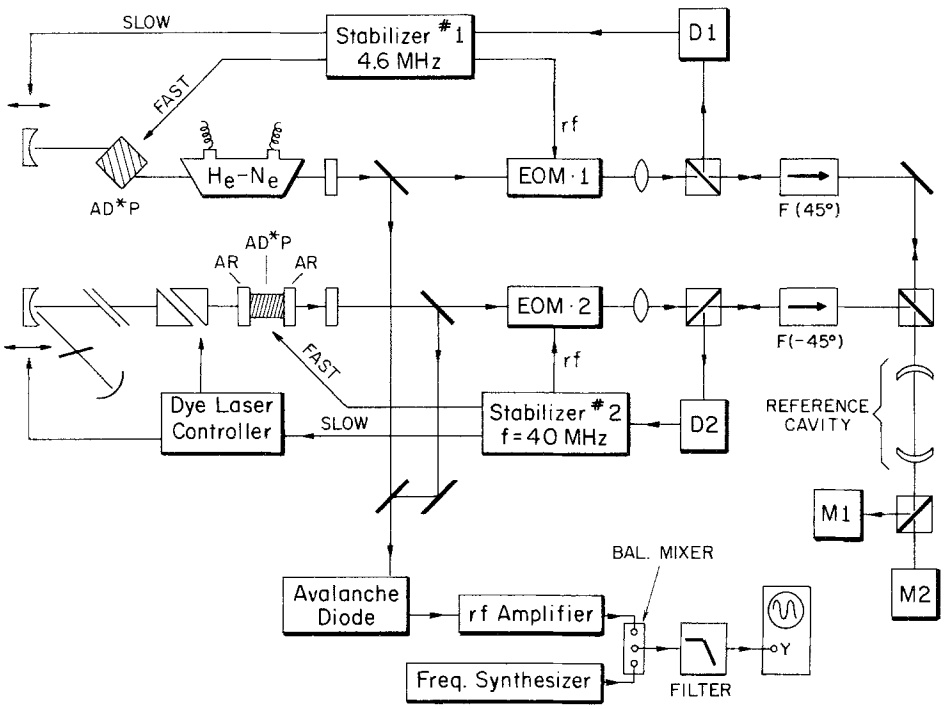

Fig. 3. Two lasers locked to one interferometer to test the locking precision. Separate modulation frequencies, polarizations and a difference of 1 order of optical interference assures absolute isolation of the two laser control systems. The pre-modulation beam splitters and an auxiliary avalanche photodetector allow heterodyne comparison of the two optical sources. The elements marked F($\pm 45°$) are 45° Faraday rotators (terbium gallium garnet crystal) which effectively isolate each laser from the cavity while steering the cavity reflection signals to the appropriate detector

pecially interested in the operation of the cavity as a memory element, which makes it possible to *phase lock* a single laser onto a cavity (i.e., onto a weighted time average of the laser's previous output phase).

To make the demonstration of phase coherent locking transparent and convincing, we have chosen to lock two totally independent lasers onto a single cavity. Thus extreme isolation of the cavity from vibration and from temperature changes – while essential for the ultimate intended applications – are not necessary for our diagnostic experiments which use the difference between the two lasers as their output. To illustrate the system advantages most clearly while providing useful performance diagnostics, we have chosen one of our lasers to be a 633 nm single-mode HeNe gas laser with a fast intracavity Brewster angle AD*P phase modulator. A rigid invar frame and low noise dc excitation lead us to expect that even a rather slow servo ($B \lesssim 50$ kHz) will be able to servo-lock this laser rather well to produce a low noise optical sine-wave reference.

By contrast, the second laser is a commercial jet stream dye laser, typically displaying several radians phase noise within a microsecond, as noted before. Further, the free-running laser demonstrated frequency excursions of $\simeq 30$ MHz pp at $\lesssim 300$ Hz Fourier frequencies, arising from jet-stream thickness variations due to residual pump-induced pressure variations. Alternatively, the laser may be used with its commercial locking electronics to provide a frequency line width of ≈ 4 MHz peak to peak. The entire optical/electronic system is indicated schematically in Fig. 3.

For the gas laser, the rf sideband-generating crystal was ADP ($5 \times 5 \times 20\,\mathrm{mm}^3$) used as a transverse cut (r_{41}) optical phase modulator. Approximately 0.5 W of $f_m = 4.6$ MHz rf was coupled to this crystal through a self-resonant step-up transformer from a 50 Ω rf source. The sidebands produced were relatively pure phase modulation sidebands (modulation index ~ 0.5). Incidental AM was shown to be less than -33 dB by measurement of the if signal with the reflection cavity detuned from resonance.

The 4.6 MHz component of the optical reflectometer signal from the photodiode was amplified by ≈ 20 dB to provide a maximum rf power level of ~ -5 dBm. After a bandpass filter at 4.6 MHz this signal was fed into a doubly-balanced mixer whose reference input was taken through a suitable phase shifter from the 4.6 MHz rf source. As may be seen in Fig. 2, the balanced mixer output shows a "frequency discriminator" antisymmetric resonance curve whenever any of the optical input frequencies match the cavity frequency. We locked to the central feature.

A very important practical attribute of this discriminator curve arises from the presence of the first order

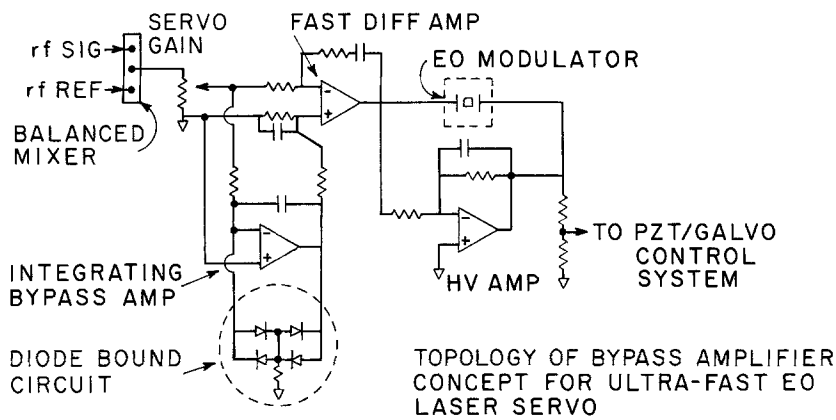

Fig. 4. Topology of bypass amplifier solution to problem of fast, high-gain amplification of servo signals. High-frequency components experience the time delay of only the fast difference amplifier, with the HV amplifier output point acting as ac ground. After further "bypass" amplification, lower frequency error components are fed to noninverting input of the fast differential amplifier. A similar configuration allows a slower high voltage stage to be used to extend the dynamic range

side resonances which occur at $f_0 \pm f_m$. From consideration of the nearly divergent nature of the low frequency noise components of the laser frequency, it is clear that very strong closed-loop servo gain will be needed near dc. (For example, we typically use 2 or 3 cascaded integrators, with suitable moderation of the transfer function slope at higher frequencies to preserve good transient response.) With such high amplification of the low frequencies, even a very small offset in the first amplifier will ultimately generate a large correction signal. Thus if a transient causes the laser system to unlock, it might have been expected that spontaneous relocking would not readily occur. However, in our present system, there is a frequency window $2 \times f_m$ wide centered on f_0 over which the control system has the correct sign of the error signal to automatically reaquire lock (Fig. 2). This property vastly reduces the stability requirements on the environment and on the laser's basic free-running stability, by about 2 orders of magnitude in the present case. Thus accidential servo unlocking is transformed from a nearly impossible environmental and performance limitation basically to a non-problem. For example, even in these first preliminary experiments, gas laser locking times of ~ 30 min were obtained, limited mainly by insufficient electronic range to follow the thermally-induced cavity length changes.

Propagation delays through the control loop electronics form the principal limitation on the usable servo bandwidth. For example, a loop time delay τ limits the servo closed-loop bandwidth to about $f_{3\mathrm{dB}} \lesssim 1/4\tau$ and typically results in a 6–12 dB degradation of the closed-loop performance in the upper 1–2 octaves relative to the available signal/noise ratio and apparent gain. Especially when cascading many amplifier stages to obtain the desired low-frequency gain, it becomes a problem to ensure adequately-low time delay. We will now discuss our "bypass" amplifier solution to this problem of time delay in multistage amplifiers.

We find it effective to arrange the amplifiers between the frequency discriminator output and the laser's fast electro-optic frequency transducer to be configured in a "bypass" as opposed to a "cascade" topology. In the "bypass" case, the compound amplifier has the fast components of the error signal propagating directly and only through the "fast" amplifier (Fig. 4). The low frequency error components after a sign-inverting integrating amplifier are fed (after noise filtering) into the fast amplifier's input complementary to the one used for the fast signal. Considering that this low frequency signal will be nearly infinitesimal when the system is functioning correctly in lock, it is useful to place diode bounds on the low frequency channel's output so that even if it is saturated, the fast signal can be guaranteed to be larger and dominate. Thus the compound system will settle adaptively and rapidly with a time constant related to the fast channel's bandwidth rather than that of the low frequency channel. Small residual settling errors can occur for times of the order of the inverse crossover frequency where the slope changes and the phase-shift begins to increase. In practice one seeks a compromise between a high break point where the extra gain boost at high frequencies will give better feedback reduction of quasi-monochromatic noise sources and a low break point where the servo gain is already so high as to effectively suppress the small excursions associated with settling problems at the break point. (Settling time errors at high frequency/short times are unpleasant because they effectively transfer noise energy from very high Fourier frequencies into lower frequencies within the control band where the servo system is needed to work effectively.)

The output voltage swing of the fast amplifier typically is quite limited, so it is attractive to "integrate" its dc value and apply this to the opposite control electrode of the intracavity phase-modulator crystal. Here an amplifier module with reduced high frequency gain but with ± 150 V output swing is appropriate.

Finally, if the natural output frequency of the laser and the control point of our discriminator differ sufficiently, it will be necessary to provide a loop of even larger frequency range. In the experiment described here, this correction for the HeNe laser was provided by mounting one of the mirrors on a PZT transducer driven by a high voltage amplifier. For the dye laser the dc error signal was converted into a current and fed into the error summing point of the commercial dye laser electronics to offset its set-point slightly from its own cavity reference.

A first objective of our experiments was to demonstrate the stable locking of this optical Pound stabilizer far into the transient domain where the servo attack time is much less than the cavity ringing time. With a cavity finesse of 330 (measured by changing of sideband frequency to calibrate the scan frequency axis) and the axial mode separation of 100 MHz, we have a cavity linewidth of ~300 kHz. A servo unity gain frequency above 3 MHz was easily achieved for the dye laser system where the Nyquist limit associated with the 40 MHz modulation frequency was not troublesome.

The servo electronics need to display a flat response for several octaves around the unity gain frequency – as well as very low basic time delay – in order to achieve correct and stable servo operation. Basically, the first integration is provided by the cavity's response with its transfer function as a frequency discriminator showing a 6 dB/oct roll off above the cavity 3 dB frequency of ~300 kHz. For optimum settling performance it would be appropriate to match the cavity and to provide a uniform −6 dB/octave slope, but it was felt that the higher gain at high Fourier frequencies was a still more important criterion. So the amplifier gain, flat above 500 kHz, starts to increase below this frequency and we accepted a minor problem of transient overshoot and servo ringing in exchange for a few dB more gain.

The second purpose of our experiment was to investigate the precision with which lasers can be servo-locked to an interferometer cavity, using the heterodyne between the two independent lasers as the diagnostic tool. To assure that the lasers were truly independently-locked to the cavity and that they had no unexpected mutual interactions or possibility for coupling, we took three precautions (Fig. 3). First, they were operated with quite different rf modulation frequencies (4.6 MHz and 40 MHz). Second, the polarizations were orthogonal. Third, the lasers were locked at two different optical frequencies, differing by one unit in the order of interference in our control interferometer ($c/2L = 100$ MHz). A portion of each beam, taken before the phase modulators with weak beam splitters, was brought to a beam-combining plate, from which the recombined beams were directed onto a high speed avalanche photodiode. The optical heterodyne signal of approximately 100 MHz was amplified and the further heterodyned down with a very stable, tunable rf frequency synthesizer source. The resulting audio beat frequency signals were low-pass filtered ($f_{3\,\mathrm{dB}} \simeq 10$ kHz) and displayed on an oscilloscope sampled and stored with a transient analyzer. This time domain waveform is shown in Fig. 5. The sampling dots are separated by 40 μs and serve to provide a convenient time scale for our measurement. For example, a typical cycle requires about 33 intervals; the dispersion is 1 or 2 intervals from cycle to cycle. The fast phase noise represented substantially less than 1 radian, even when viewed without the 10 kHz low pass filter. Thus the laser's beat fast linewidth may be directly inferred from Fig. 5 and is clearly much less than the beat frequency of ~750 Hz. (Fast linewidth – in circular frequency units – may be usefully defined as the inverse of the time in which a 1 radian phase error accumulates.) It appears that the main phase-coherence problem displayed in Fig. 5 is actually a small drift in the laser frequency occurring over a several cycle interval. The additive 60 Hz ripple visible in Fig. 5 gives a good hint as to the origin of this low frequency FM: we believe it to be caused by 60 Hz grounding problems.

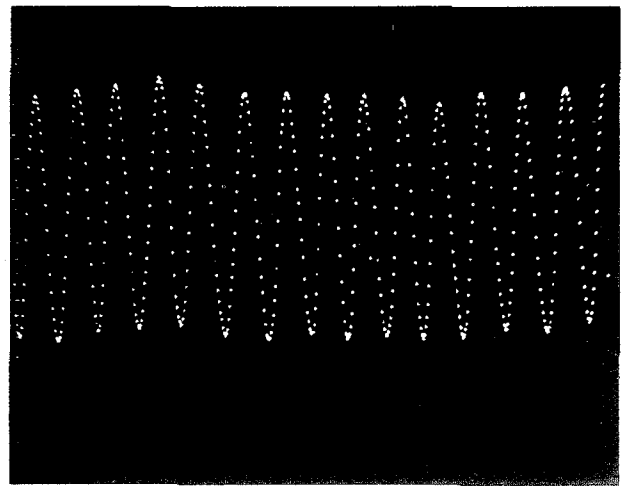

Fig. 5. Time-domain beat note. Synthesizer adjusted to give ~750 Hz second heterodyne beat frequency. The dots represent sampling windows separated by 40 μs. The number of 40 μs points per wave is ~33 and does not vary more than ±1 or 2 from cycle to cycle. Certainly the laser line width is below 100 Hz in the figure

A useful way to investigate the laser (beat) phase coherence over this data sample is provided by Fourier transform techniques. We have applied the usual cosine apodization to the first and last 10% of the data array and then calculated the Fourier amplitude spectrum. The results are shown in Fig. 6 by the vertical

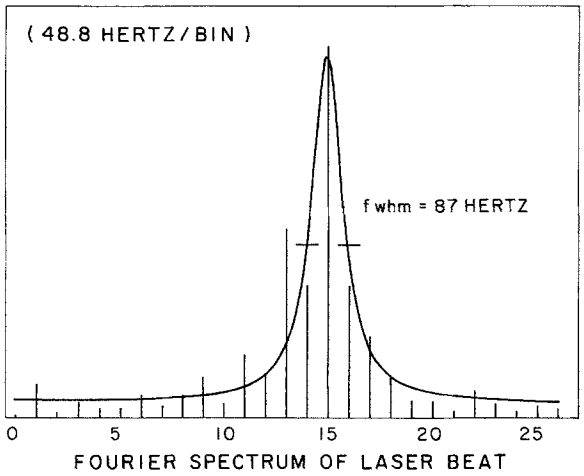

Fig. 6. Fourier amplitudes of data of Fig. 5 (bars) with best fitting Lorentzian representation (shown as solid curve). Center frequency of the beat was 732 Hz (+100 MHz) and the beat width was 87 Hz FWHM

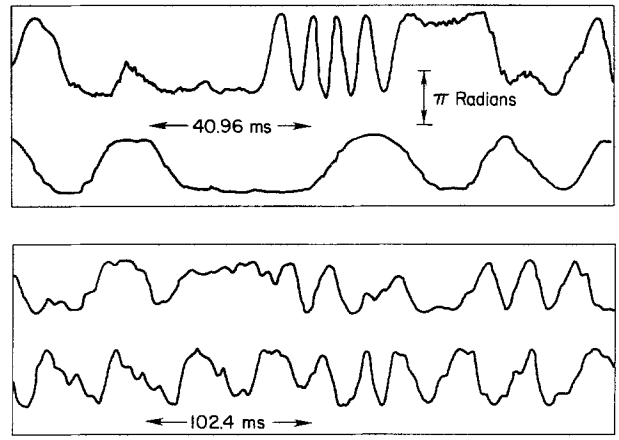

Fig. 7. Phase beat waveform. Frequency synthesizer offset adjusted for zero beat. Display bandwidth: 1 kHz. Each pair of curves taken with a different dc integrator IC amplifier in dye laser lock system. Second curve shows remarkably good phase stability for times ~10 ms. Figure 5 shows that these changes are due to residual FM

bars. Also shown in Fig. 6 is the best-fitting Lorentz representation of the spectrum. We feel that a significant part of the observed 87 Hz width arises from power-frequency-related sidebands, but unfortunately the data length of this record is insufficient for a very definitive study. Improved experiments are in preparation.

As another method to investigate this long-term drift of the lasers' frequencies, we adjusted the frequency synthesizer to produce an approximate zero-beat condition and displayed the "zero beat" waveform on the transient digitizer. A few representative curves are shown in Fig. 7. It was found that the dc value of the beat frequency was rather unstable, tending to jump from one value to another as may be seen in the upper trace of Fig. 7. Some of these problems were readily identified with rf ground loops and rf radiation pickup in our rather crudely-shielded setup. Also different dc IC amplifiers were tried in the first bypass amplifier location for the dye laser system which was especially sensitive in view of the poorer modulator performance at 40 MHz. The top two traces of Fig. 7 were made with one opamp, the lower two with another type. Note the different character of the noise. The second trace in Fig. 7 shows some intervals of ≈ 10 ms during which less than 1 radian phase error occurs. For a crude guess of the linewidths we might take $2\pi\delta f \sim 1$ rad/10 ms, i.e. $\delta f \sim 16$ Hz, which is optimistic in that we have selected an optimum time sample of the data for this test.

Although it is obvious that considerable technical improvements are necessary to improve our apparatus and to make full use of this high stability, we may already regard the achievement of a linewidth of this order at 5×10^{14} Hz ($\delta f/f \approx 1 \times 10^{-13}$) as offering real promise for the future. This sideband technique will be interesting for both spectroscopic sources and for gravitational wave detector investigations. Some results have already appeared [1, 12].

Conclusion

In summary, we have described a reflection mode laser frequency-stabilizing system with phase-modulation sidebands which is the optical equivalent of the rf microwave Pound stabilizer [13, 14]. We described a new high-speed operating regime for such a system where the detected signal is proportional to phase rather than frequency changes as in the adiabatic regimes of slower changes. We have demonstrated the proper operation of the system in this new high-speed regime, using a unity-gain to cavity-ringing-time ratio of about 10. By direct heterodyne comparisons of two separate lasers, independently locked to adjacent orders of the same high finesse reference interferometer, we have shown that stabilization of visible lasers, even jet stream dye lasers can achieve sub-100 Hz linewidths. Experiments with better technical solutions to several of the optical and electronic challenges are in preparation.

Acknowledgements. We are indebted to a number of coworkers and colleagues who have contributed to this work by their discussion and enthusiasm. Particularly, we are indebted to R. V. Pound for many illuminating remarks and helpful suggestions during the course of the experiments at JILA. The efforts of L. Hollberg with the experiments are appreciated. The work at JILA has been supported in part by the National Bureau of Standards program of precision measurement research for possible application to basic standards and in part by the Office of Naval Research and the National Science Foundation.

The gravity wave program at Glasgow is supported by the University of Glasgow and the Science and Engineering Research Council (UK). In the U.S. the work forms part of a program of gravity wave research supported by California Institute of Technology and by the National Science Foundation (PHY79-12305).

References

1. R. W. P. Drever, J. Hough, A. J. Munley, S.-A. Lee, R. Spero, S. E. Whitcomb, H. Ward, G. M. Ford, M. Hereld, N. A. Robertson, I. Kerr, J. R. Pugh, G. P. Newton, B. Meers, E. D. Brooks III, Y. Gursel: In *Laser Spectroscopy V*, ed. by A. R. W. McKellar, T. Oka, B. P. Stoicheff (Springer, Berlin, Heidelberg, New York 1981) pp. 33–40
2. A. D. White: IEEE J. QE-**1**, 349–357 (1965)
3. R. L. Barger, M. S. Sorem, J. L. Hall: Appl. Phys. Lett. **22**, 573–575 (1973)
4. Yu V. Troitskii: Sov. J. Quant. Electron. **8**, 628–631 (1978). This is apparently the first publication analyzing the advantages of reflection-mode operation of a cavity-type laser stabilizer
5. R. E. Grove, F. Y. Wu, S. Ezekiel: Opt. Eng. **13**, 531–533 (1974)
6. L. A. Hackel, R. P. Hackel, S. Ezekiel: Metrologia **13**, 141–143 (1977)
7. R. L. Barger, J. B. West, T. C. English: Appl. Phys. Lett. **27**, 31–33 (1975)
8. J. Helmcke, S. A. Lee, J. L. Hall: Appl. Opt. **21**, 1686–1694 (1982)
9. J. L. Hall: Unpublished, and in Proc. Int. Conf. on Lasers, Beijing, China (May 1980)
10. J. L. Hall, H. P. Layer, R. D. Deslattes: "An acoustic-optic frequency and intensity control system for cw lasers", 1977 Conference on Laser Engineering and Applications, Digest p. 45, IEEE Cat No. 77CH 1207-O Laser
11. Closely related considerations have been discussed in connection with frequency multiplication. See F. L. Walls, A. deMarchi: IEEE Trans. IM-**24**, 210–217 (1975)
12. FM sideband methods in the optical domain were developed independently by G. C. Bjorklund: Opt Lett. **5**, 15–17 (1980) and used for spectroscopy by G. C. Bjorklund, M. D. Levenson: Phys. Rev. A **24**, 166–169 (1981); and by J. L. Hall, L. Hollberg, T. Baer, H. G. Robinson: Appl. Phys. Lett. **39**, 680–682 (1981) and in *Laser Spectroscopy V*, ed. by A. R. W. McKellar, T. Oka, B. P. Stoicheff (Springer, Berlin, Heidelberg, New York 1981) pp. 15–24
13. R. V. Pound: Rev. Sci. Instrum. **17**, 490–505 (1946)
14. R. V. Pound: Private communication (September 1979)